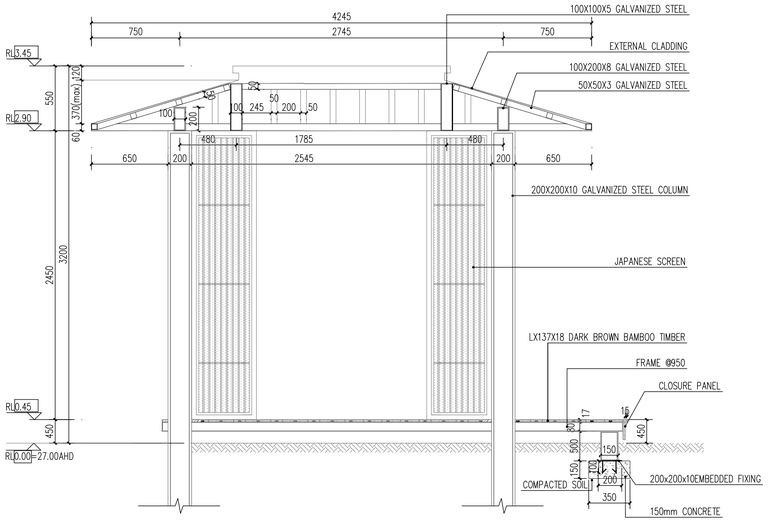

① 2-2'SECTION 1:20

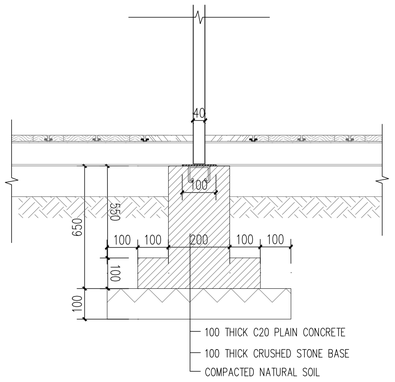

② GRID FIXING METHOD 1:10

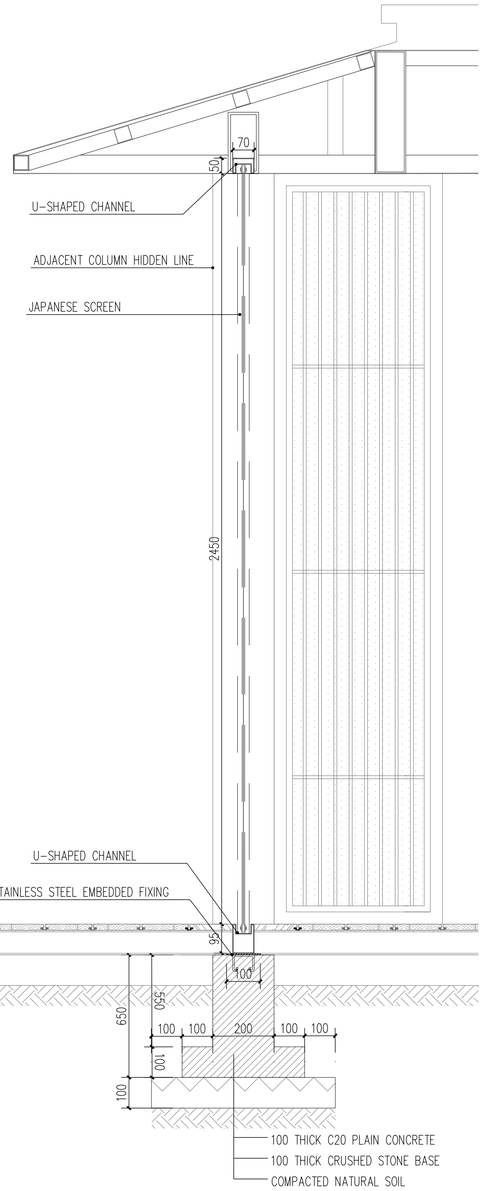

⑥ 2-2'SECTION 1:20

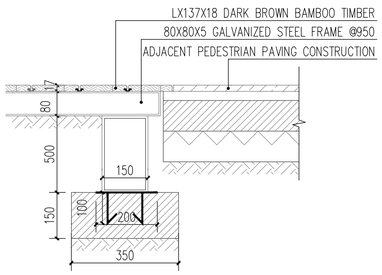

③ PLATFORM PAVEMENT CONNECTION DETAIL 1:10

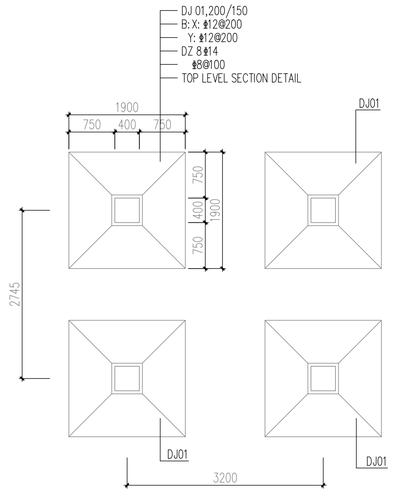

④ TEA PAVILION FOUNDATION PLAN 1:50

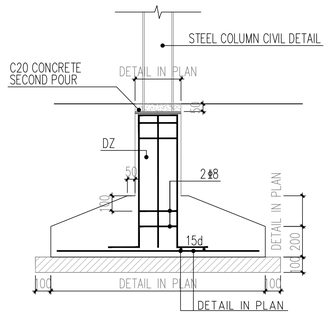

⑤ TEA PAVILION FOUNDATION SECTION 1:20

NOTES: 1. All dimensions are in millimeters unless otherwise stated 2. Actual site dimensions to be checked prior to construction 3. All materials to comply with Australian standards 4. Construction to be in accordance with local building codes and safety regulations	Client	RICHARD LE MESSURIER, SCOTT HAWKEN	Title	PAVILION DETAILS	Reference	AS1100.301, AS1100.101	Figure number	PD-1.02
	Builder	HAOMIN YANG			Scale	1:10, 1:20, 1:50	Date	2025.7.1